# PWS-870

## 10" Fully Rugged Tablet with 4th Generation Intel® Core™ i Processor

## Features

- MIL-STD-810G and IP65 certified, can withstand drops of up to 4ft.
- 10.1" HD high-brightness, multi-touch, Gorilla Glass panel with digitizer
- 4th generation Intel® Core™ i processor supports Windows 8
- Built-in 4G LTE, WLAN (802.11 a/b/g/n/ac), BT4.0, and GPS modules with Beidou/GLONASS support
- Hot-swappable battery provides up to 11 hours operation(*1)
- Built-in dual cameras, 1D/2D barcode scanner, and NFC RFID
- Rich peripherals with vehicle docking station, desk docking station, and extension module support

IP65 4ft

## Introduction

The PWS-870 is a fully rugged mobile tablet featuring a 10.1" HD resolution capacitive Multi Touch panel, an Intel Core i processor, mSATA SATA3 SSD storage, USB 3.0 and HDMI communication IO ports. For communcation it comes with 802.11 a/b/g/n/ac WiFi, Bluetooth, GPS, and 4G LTE. One of the most important unique design features is it's built-in data collection features: 2M/5M dual cameras, 1D/2D barcode reader, and NFC RFID reader. To mobile field workers, hot-swappable external battery for long-lasting support allows the system to operate for up to 11 hours at a time. The fully-rugged design (MIL-STD-810G, IP65 dust & water resistant and 4-foot drop) allows PWS-870 to perform in harsh environments. With sunlight readable display, PWS-870 is a perfect device for outdoor work.

## Specifications

| | | | |
|---|---|---|---|
| Motherboard | CPU & Chipset | Intel® Core™ i3 Processor 1.7 GHz 4010U<br>Intel® Core™ i5 Processor 1.9 GHz 4300U with Turbo Boost to 2.9GHz<br>Intel® Core™ i7 Processor 1.7 GHz 4650U with Turbo Boost to 3.3 GHz | |
| | Memory | SO-DIMM DDR3L 1600 MHz up to 8 GB(*2) | |
| | Storage | Support mSATA SATAIII SSD 32 GB ~ 256 GB(*2) | |
| Display & Touchscreen | Display | 10.1" HD (1366x768) Low reflection LED Backlight LCD (400 nits default; 950 nits by project) | |
| | Touch Panel | Capacitive multi touch<br>Sunlight readable feature<br>Display with Corning® Gorilla® Glass Gen2 | |
| | Sensor | Ambient light, Accelerometer (G-Sensor), E-compass , Gyroscope Sensor<br>- Screen Rotation: 0°, 90°, 270° | |
| System | Wireless Commnunication | Default WIFI 802.11 a/b/g/n/ac<br>Default Bluetooth V4.0 (Class2) + EDR;<br>(BT4.0 Class1 by project) | Optional integrated 4G LTE mobile broadband<br>Optional dedicated GPS, Beidou, and Glonass |
| | Camera | Front Camera: 2M pixel CMOS sensor; supports video streaming<br>Rear Camera: 5M pixel CMOS sensor; with LED flash light and auto focus control | |
| | Data Collection | Optional built-in 1D barcode scanner (Honeywell N4313)<br>Optional built-in 2D barcode scanner (Honeywell N5600)<br>Optional built-in NFC RFID reader (13.56MHz, supports ISO14443A/B, ISO15693, MIFARE, Felica) | |
| | Security | 1. Optional fingerprint scanner<br>2. TPM 1.2<br>3. Kensington cable lock slot | |
| | Audio | Integrated speakers (2W)<br>Integrated microphone | |
| | Input | Capacitive multi touch<br>Programable button x2 | Capacitive pen<br>On-screen QWERTY keyboard |
| | LED | Power LED<br>Battery LED<br>RFID LED | |
| | I/O | USB 3.0 x2; USB 2.0 x1<br>HDMI 1.4 x1<br>SD card slot x1 (SDXC/UHS1/UHS2)<br>Audio combo jack (Line-in/Line-out) x1 | DC-in x1<br>Docking port x1 (32PIN)<br>(USB3.0, USB2.0, PCIE Gen2, Display port)<br>SIM slot x1 |
| | Battery | Main battery: 4S1P 14.4V 2730mAh<br>Hot-Swappable external battery: 4S2P 14.4V 4080mAh<br>With Hot-Swappable external battery up to 11hrs(*1) | |
| | Power Input | 19V ± 5% | |
| | OS | Windows Embedded 8.1 Industry Pro (Default), Windows Embedded 8 Standard (Default),<br>Windows 7 Pro 64bit (By project), Linux Ubuntu (By project)<br>Windows 10 IoT 64 bit (By project) | |

(1) The battery life estimates based on MobileMark 2007 performance. Battery performance will vary by system setting and configuration.
(2) Only Advantech is able to change SSD and Memory.

## Dimensions

Unit: mm

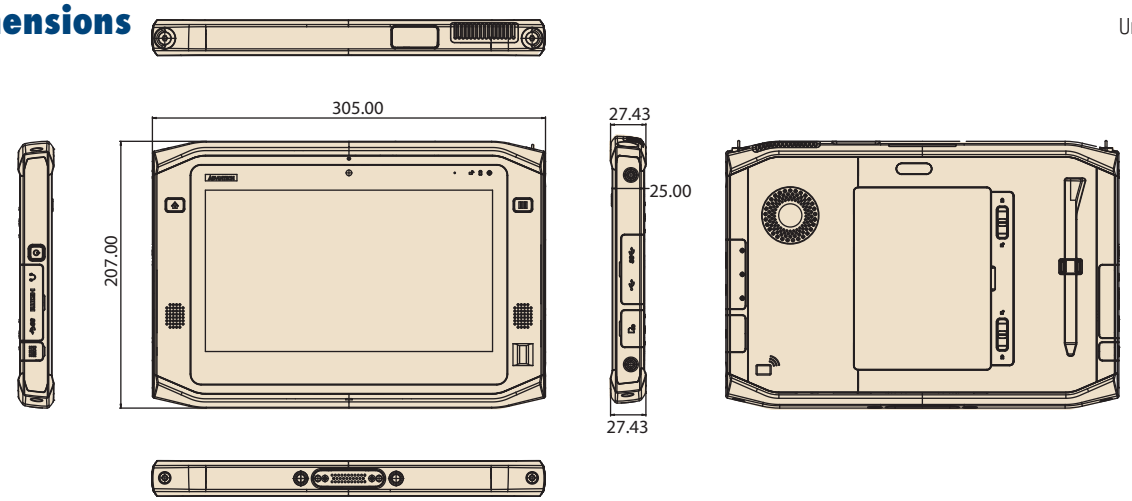


## Specifications Cont.

| | | | |
|---|---|---|---|
| Environment | Temperatue & Humidity | Operating Temperature -20° C ~ 50° C (Charge: 0° C ~ +40° C for the battery protection)<br>Storage Temperature -20 ~ 60° C<br>Operating Humidity 5% ~ 95% @ 40° C | |
| | IP Rating | IP65 | |
| | Vibration | MIL-STD-810G | |
| | Drop | 4 feet | |
| Certifications | EMC/RF | CE/FCC/CCC/PTCRB/SAR | |
| | Safety | UL/CE/CB/CCC | |
| Peripheral | Peripheral(*3) | ▪ Universal Cover (Handle, stand, hand strap, and shoulder belt)<br>▪ Extension modules for MSR, UHF RFID, extra IO ports solution (By project) | ▪ Desk docking station<br>▪ External battery<br>▪ Car adapter<br>▪ Vehicle docking staion |
| Dimension & Weight | Dimensions | 305 (L) x 207 (W) x 25~27 (H) mm | |
| | Weight | 1.4 kg | |

(3) For the peripherals' availability, please check with Advantech's sales directly.

## I/O Connectors

1. 2M Camera
2. Home Key (Programmable)
3. Function Key (Programmable)
4. Speakers
5. Fingerprint (Optional)
6. 5M AF Camera with Flash Light
7. FAN
8. NFC RFID Reader (Optional)
9. Capacitive Pen
10. Latch (For External Battery)

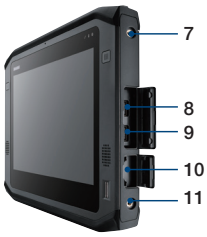


1. Kensington Lock
2. Power Button
3. Audio Combo Jack
4. HDMI Connector (1.4)
5. USB Connector (USB3.0)
6. DC-in
7. Screw Hole for Extension Module
8. USB Connector (USB3.0)
9. USB Connector (USB2.0)
10. SD Card Slot (SDXC)
11. Screw Hole for Extension Module

## Ordering Information

| Part Number | Description |
|---|---|
| PWS-870-3S6W0E000E | Core i3 WiFi/BT only , with WE8S |
| PWS-870-3S6G6E5F0E | Core i3 full function, EU LTE, WE8S |
| PWS-870-5S6G6P5F0E | Core i5 full function, EU LTE, Win 8.1 Pro |
| PWS-870-7S6G6P5F0E | Core i7 full function, EU LTE, Win 8.1 Pro |
| PWS-870-3S6G4E5F0E | Core i3 full function, US LTE, WE8S |
| PWS-870-5S6G4P5F0E | Core i5 full function, US LTE, Win 8.1 Pro |
| PWS-870-7S6G4P5F0E | Core i7 full function, US LTE, Win 8.1 Pro |

Note:
- LTE band varies by different carrier. To select suitable LTE SKU, please contact with your Advantech sales.
- Standard package includes PWS-870 tablet PC, power adapter, capacitive pen and tether
- PWS-870 is equiped with 4GB RAM & 64GB SSD by default. Full function include: WIFI, BT, WWAN, GPS,NFC,Finger Printer, 2D barcode, rear and front camera.